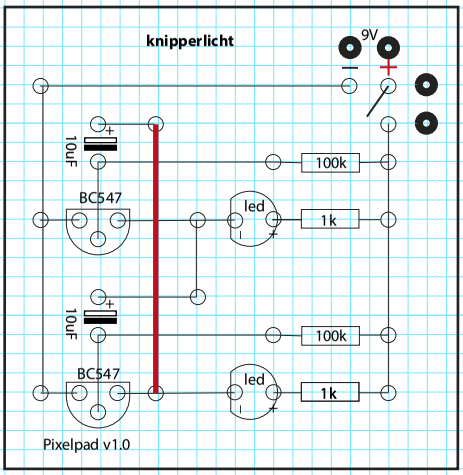
knipperlicht
9V
10uF
100k
BC547
led
1k
10uF
100k
BC547
led
1k
Pixelpad v1.0

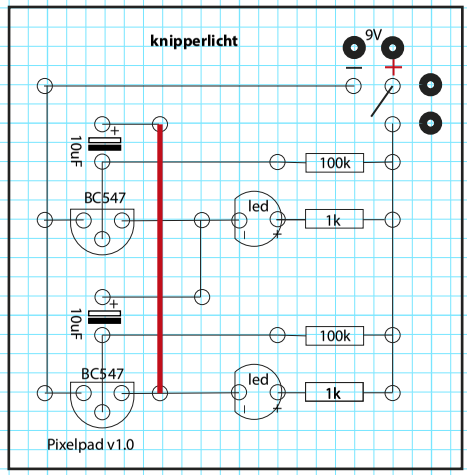
knipperlicht
9V
10uF
100k
BC547
led
1k
10uF
100k
BC547
led
1k
Pixelpad v1.0

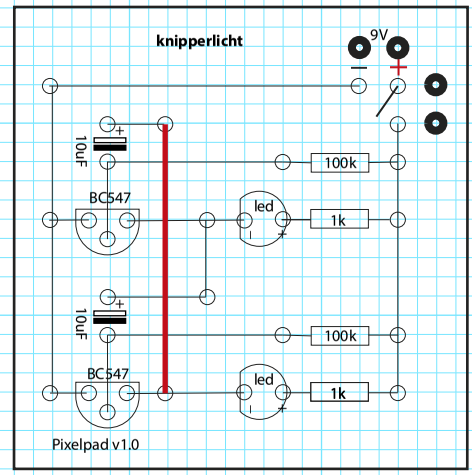
knipperlicht
9V
10uF
100k
BC547
led
1k
10uF
100k
BC547
led
1k
Pixelpad v1.0

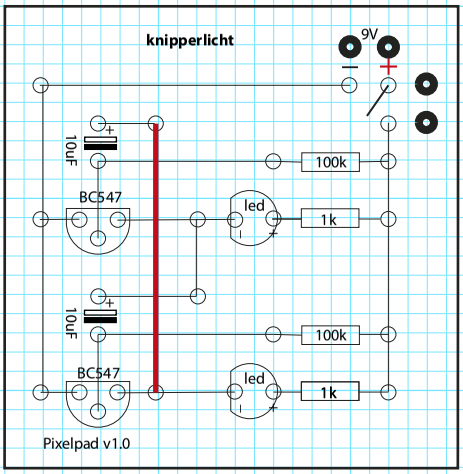
knipperlicht
9V
10uF
100k
BC547
led
1k
10uF
100k
BC547
led
1k
Pixelpad v1.0

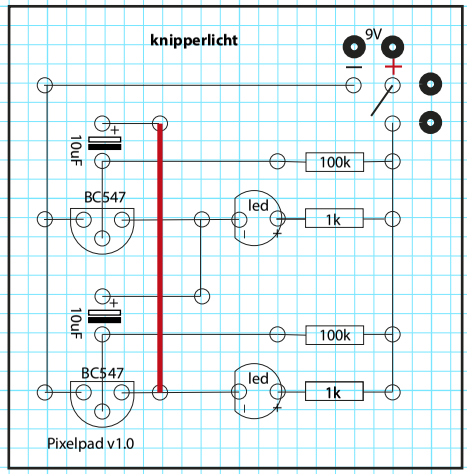
knipperlicht
9V
10uF
100k
BC547
led
1k
10uF
100k
BC547
led
1k
Pixelpad v1.0

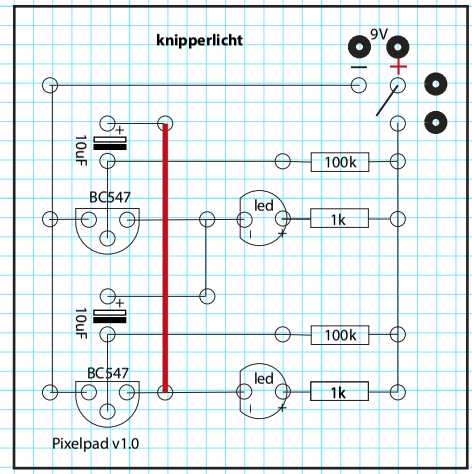
knipperlicht
9V
10uF
100k
BC547
led
1k
10uF
100k
BC547
led
1k
Pixelpad v1.0

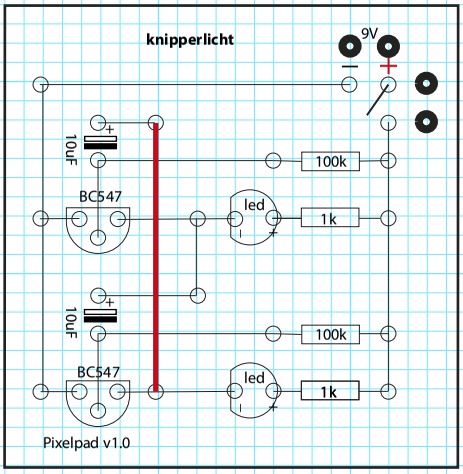
knipperlicht
9V
10uF
100k
BC547
led
1k
10uF
100k
BC547
led
1k
Pixelpad v1.0

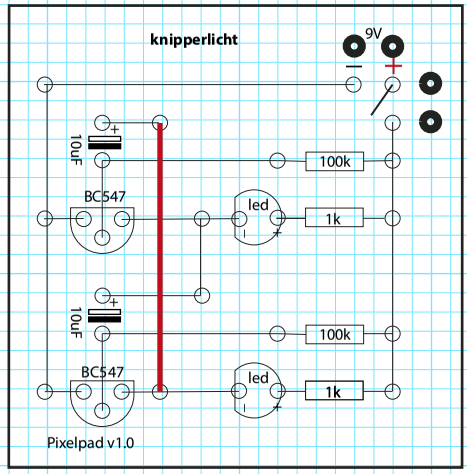
knipperlicht
9V
10uF
100k
BC547
led
1k
10uF
100k
BC547
led
1k
Pixelpad v1.0

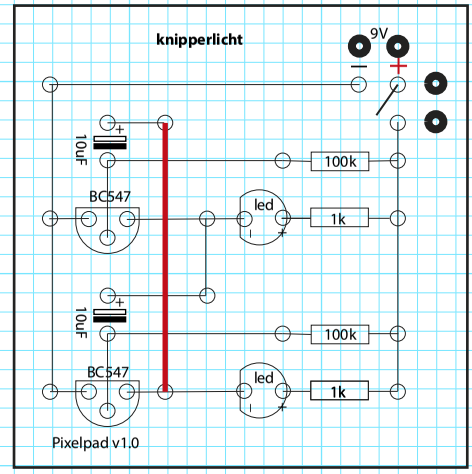
knipperlicht
9V
10uF
100k
BC547
led
1k
10uF
100k
BC547
led
1k
Pixelpad v1.0

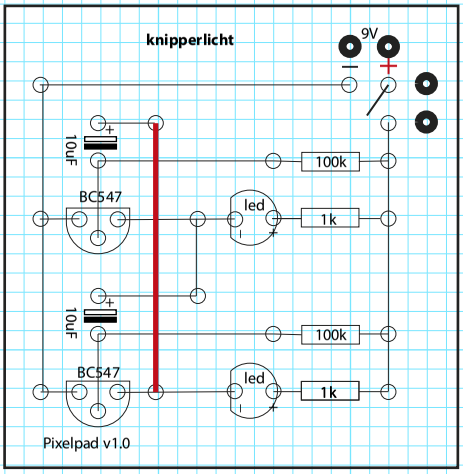
knipperlicht
9V
10uF
100k
BC547
led
1k
10uF
100k
BC547
led
1k
Pixelpad v1.0

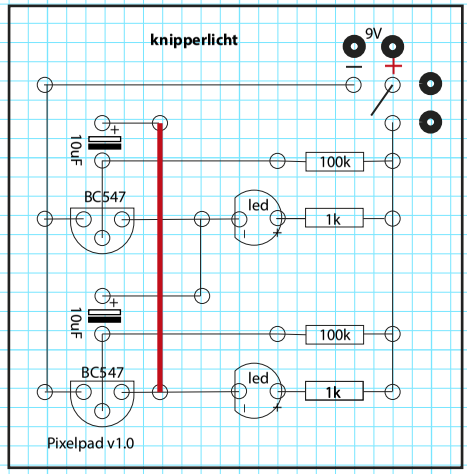
knipperlicht
9V
10uF
100k
BC547
led
1k
10uF
100k
BC547
led
1k
Pixelpad v1.0

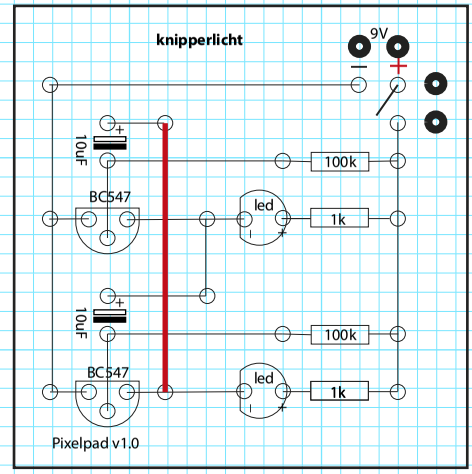
knipperlicht
9V
10uF
100k
BC547
led
1k
10uF
100k
BC547
led
1k
Pixelpad v1.0